LIUGONG

EXCLUSIVE DEALER

OF LIUGONG PRODUCTS IN WESTERN CANADA

HYDRIVE

Forklift & Equipment Inc.

Engine

PSI 2.4 L Gas/LPG
Yanmar 2.7L and 3.3L Diesel

Capacities

4,000 - 7,000 lb (2.000-3.500 kg)

2020-2035G(H)

3-SERIES FORKLIFTS

MODERN.ERGONOMIC.DURABLE.WELL SUPPORTED.

MODERN

The LiuGong 3-Series has the features and high performance that you've come to expect in a modern forklift. Our new agressive styling reflects LiuGong's "DNA" going forward. These full featured machines will exceed your productivity expectations!

- HIGH PRODUCTIVITY
- INCREASED LIFT SPEEDS
- CANBus ELECTRICAL SYSTEM
- ONBOARD DIAGNOSTICS
- MAINTENANCE REMINDERS
- LCD INSTRUMENT PANEL
- OPERATOR PASSCODE FEATURE

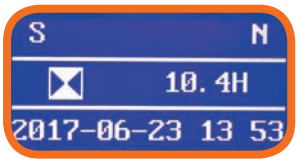

Normal Display

Fault Code

Password Login

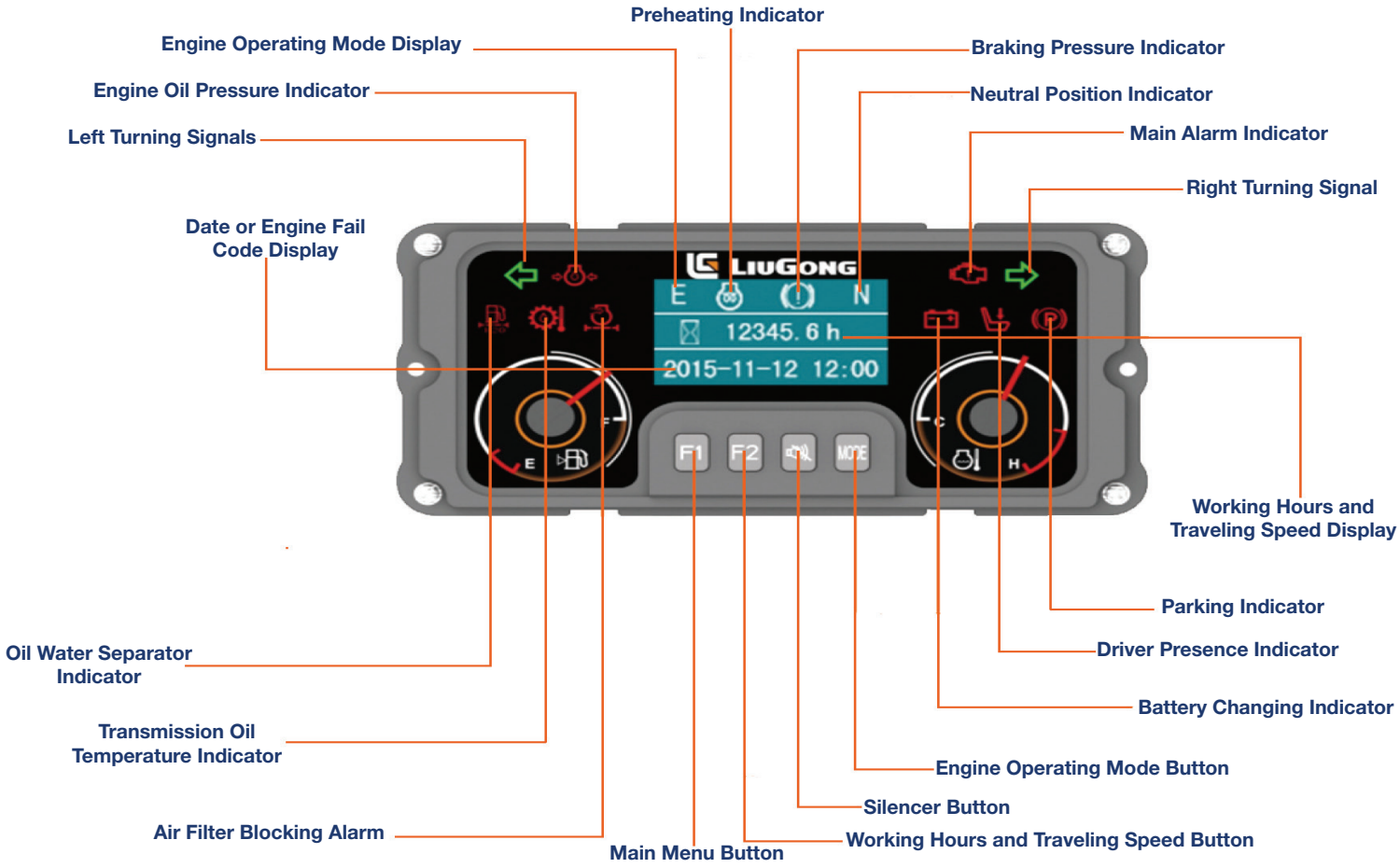

OPERATORS PRESENCE SENSING SYSTEM (OPS)

This system uses a switch sensor built into the operator's seat to detect the presence of the operator. In case the operator is not in the normal operating position, travel power is interrupted, and load handling operations are stopped to prevent unintentional movements. A warning alarm will sound if the operator leaves the machine without engaging the park brake.

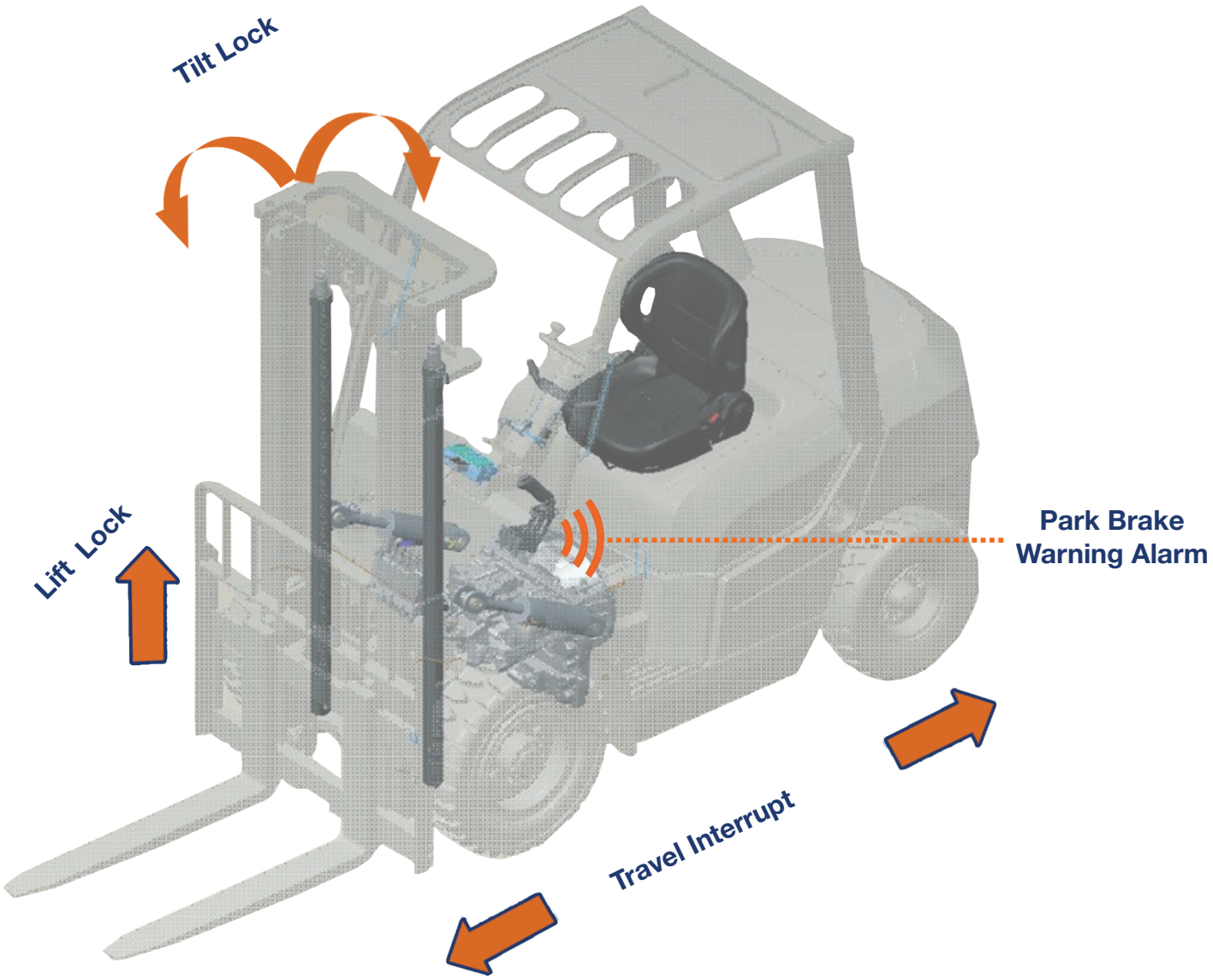

ERGONOMIC

LiuGong's customer driven design maximizes operator **comfort** and **productivity**. Our goal is to have the most comfortable operator work space in the industry.

HANDLES

Easy to reach, large front handles.

PREMIUM FULL SUSPENSION SEAT

Our premium seat provides maximum operator comfort with six different seat adjustments to suit most operator's preferences.

TILT STEERING COLUMN

Our adjustable tilt steering column features an auto-return to the pre-set position. The small diameter steering wheel features a spinner knob for low effort, easy steering.

PARKING BRAKES

Easy operation with effort reduced by 40%.

PEDALS

Service brake pedal effort reduced by 15%. Foot space increased by 35%.

FULL FLOATING DRIVELINE

Our new full floating driveline significantly reduces noise and vibration.

REAR SUPPORT HANDLES

Rear support handle with horn.

EXTENSIVE VISIBILITY

The panoramic view cab and counterweight design allows easy line of sight for the operator.

STEPS

Wide grated steps on both sides allow for secure footing during entry/egress.

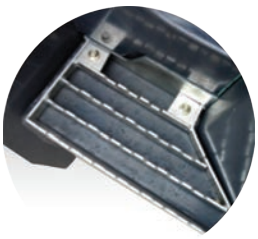

DURABLE

The 3-Series is **tough and durable,** using quality components and **innovative design**. The PSI 2.4 L Gas/LPG engine is highly efficient and easy to maintain. For the Diesel models, the Yanmar 2.7L and 3.3L engines have a proven track record for solid dependability.

POWERFUL PERFORMANCE

- 2025G-2035G
  PSI 4G64 Gas/LPG EPA certified engine 2.4L (62hp).
- 2020H-2025H
  Yanmar 4TNE92 diesel engine EPA Tier 4 interim 2.7L (44hp).
- 2030H-2035H
  Yanmar 4TNE98 diesel engine EPA Tier 4 interim 3.3L (56hp).

3-FLUID COOLING SYSTEM

Designed for ambient temperatures up to 113° F to keep running when the going gets hot. Highly efficient and clog resistant keeps the key systems running cool. Electronic over temperature sensors protect your investment by reducing performance in the off chance of overheating.

TRANSMISSION

These engines are coupled to our new transmission which features improved power efficiency and active cooling system. Increased heat dissipation by up to 30% and suitable for harsh conditions up to 113 °F (45 °C).

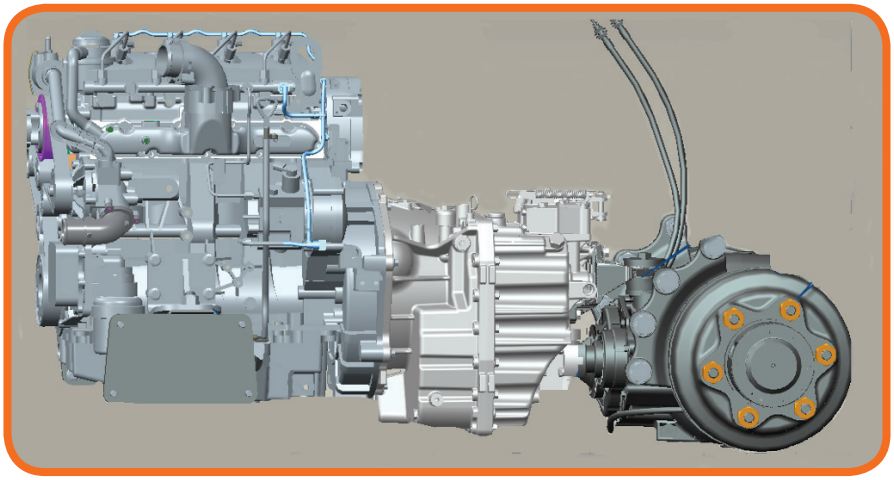

HYDRAULIC SYSTEM

The new hydraulic system revolves around our new hydraulic control valve, which is designed to optimize the hydraulic performance. The new system achieves 25% faster maximum lift speed and 40% faster lift speed at engine idle as the hydraulic pump is now driven off the transmission PTO.

IMPROVED BRAKE SYSTEM

Our new low effort brake system design minimizes exposure to contamination resulting in improved reliability. Larger surface brake pads provide enhanced performance.

LED LIGHTS

LED flood lights and LED rear combination lights provide long life and improved lighting.

TAPERED ROLLER BEARINGS

Tough and durable, able to withstand multi-axial loads applied to the steer axle.

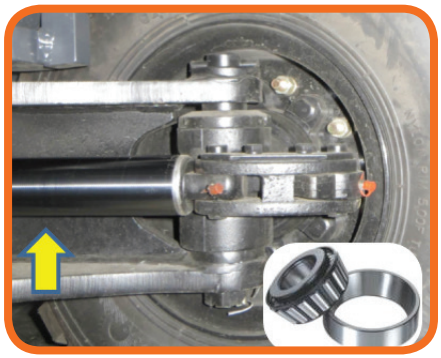

PARK BRAKE DRIVE THROUGH PROTECTION

Electronic lock out of the transmission when the park brake is set to protect the transmission.

AIR FILTER BLOCKING

Protects the engine by alerting the operator that the engine airfilter requires service.

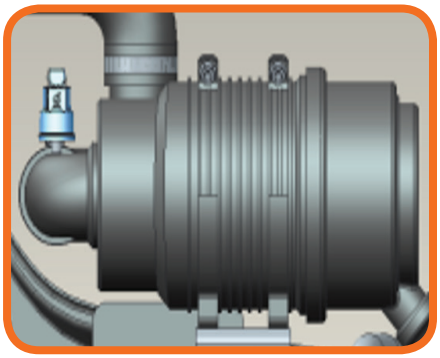

WELL SUPPORTED

LiuGong knows that **easy serviceability** and **aftersales** support is critical for maintaining machine uptime. The new 3-Series is designed for easy service access and quick diagnostics to ease maintenance and repair. Our factory trained dealer network, supported by LiuGong Regional Product Support Representatives, have the technical knowledge to keep your equipment operating at peak efficiency. These professionals are, in turn, supported by Technical Product Specialists at LiuGong North America HQ to support any issues which need additional attention. LiuGong North America also maintains a very **significant parts stock** near Houston, Texas to quickly deliver the parts needed to support your operation.

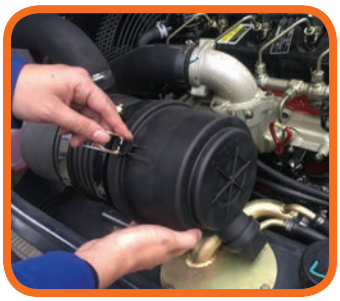

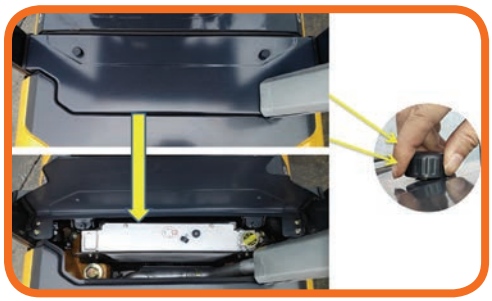

SERVICEABILITY

- No-tools air filter maintenance
- Complete access to cooling system
- Fuse box inspection at a glance
- Serviceability and daily checks are easy with the one step column fold up and engine cover which opens 85 degrees. all daily checks are within easy reach of the operator and the floor plate can be easily removed if necessary.
- 70% commonality of parts

EASY TANK EXCHANGE

There is a great serviceability all around the 3-Series machines. LPG models come standard with swing-out, fold down tank brackets making LP tank replacement simple and easy. The tank bracket locks in open and closed positions for safety.

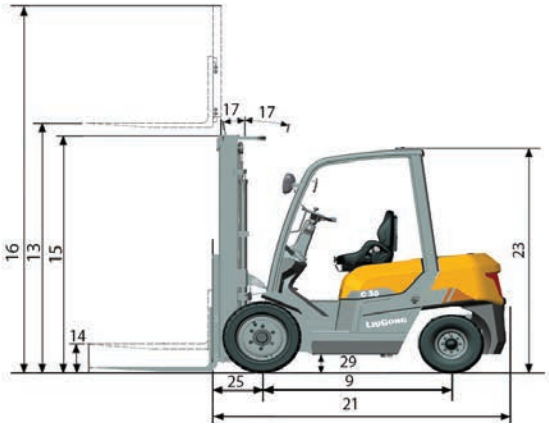

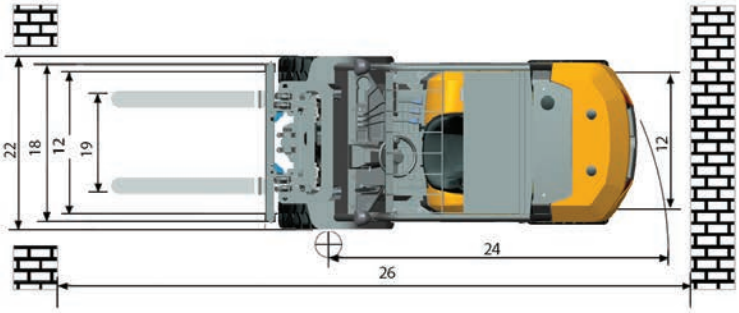

MAST SPECIFICATIONS | 2020-2025G(H)

MAST TYPE	"Maximum Fork Height (MFH)"		"Mast Overall Lowered Height (OAL)"		"Free Lift (FL) with Load Backrest*"		"Mast Tilt Angle (F/B)"	"2020H Total Weight with Standard Forks"		"2025H Total Weight with Standard Forks"	
	mm	in	mm	in	mm	in	degrees	kg	lb	kg	lb
STD 2-STAGE	3,000	118.1	2,175	85.6	140	5.5	6/12	3,650	8,047	3,800	8,377
	3,300	129.9	2,190	86.2	140	5.5	6/12	3,670	8,090	3,821	8,424
	3,500	137.8	2,425	95.5	140	5.5	6/12	3,716	8,192	3,835	8,455
	4,000	157.5	2,725	107.3	140	5.5	6/6	3,783	8,340	3,946	8,699
	4,500	177.2	2,975	117.1	140	5.5	6/6	3,849	8,486	4,051	8,931
	5,000	196.9	3,205	123.6	140	5.5	3/6	3,915	8,631	4,155	9,160
	5,500	216.5	3,725	146.7	140	5.5	3/6	3,982	8,779	4,182	9,220
	6,000	236.2	3,975	156.5	140	5.5	3/6	4,048	8,924	4,248	9,365
FL 2-STAGE	3,000	118.1	2,175	85.6	947	37.3	6/12	3,650	8,047	3,800	8,377
	3,300	129.9	2,185	86	1,097	43.2	6/12	3,670	8,090	3,821	8,424
	3,500	137.8	2,285	90	1,197	47.1	6/12	3,716	8,192	3,835	8,455
	4,000	157.5	2,535	99.8	1,447	57	6/6	3,626	7,994	4,026	8,876
FL 3-STAGE	4,000	157.5	2,010	79.1	922	36.3	6/6	3,880	8,554	4,080	8,995
	4,500	177.2	2,095	82.5	1,007	39.6	6/6	3,942	8,691	4,142	9,131
	4,800	189	2,165	85.2	1,077	42.4	6/6	3,970	8,752	4,170	9,193
	5,000	196.9	2,265	89.2	1,177	46.3	3/6	4,005	8,829	4,205	9,270
	6,000	236.2	2,905	114.4	1,817	71.5	3/6	4,129	9,103	4,329	9,544
	7,000	275.6	3,585	141.1	2,497	98.3	3/6	4,252	9,374	4,454	9,819

MAST SPECIFICATIONS | 2030-2035G(H)

MAST TYPE	"Maximum Fork Height (MFH)"		"Mast Overall Lowered Height (OAL)"		"Free Lift (FL) with Load Backrest*"		"Mast Tilt Angle (F/B)"	"2030H Total Weight with Standard Forks"		"2035H Total Weight with Standard Forks"	
	mm	in	mm	in	mm	in	degrees	kg	lb	kg	lb
STD 2-STAGE	3,000	118.1	2,195	86.4	145	5.7	6/12	4,480	9,877	4,800	10,582
	3,300	129.9	2,345	92.3	145	5.7	6/12	4,507	9,936	4,827	10,642
	3,500	137.8	2,445	96.3	145	5.7	6/12	4,546	10,022	4,860	10,714
	4,000	157.5	2,745	108.1	145	5.7	6/6	4,613	10,170	4,933	10,875
	4,500	177.2	2,995	117.9	145	5.7	6/6	4,697	10,355	4,999	11,021
	5,000	196.9	3,245	127.8	145	5.7	3/6	4,745	10,461	5,065	11,166
	5,500	216.5	3,745	147.4	145	5.7	3/6	4,812	10,609	5,132	11,314
	6,000	236.2	3,995	157.3	145	5.7	3/6	4,878	10,754	5,198	11,460
FL 2-STAGE	3,000	118.1	2,195	86.4	947	37.3	6/12	4,480	9,877	4,800	10,582
	3,300	129.9	2,345	92.3	1,097	43.2	6/12	4,507	9,936	4,827	10,642
	3,500	137.8	2,445	96.3	1,197	47.1	6/12	4,546	10,022	4,860	10,714
	4,000	157.5	2,745	108.1	1,447	57	6/6	4,613	10,170	4,933	10,875
FL 3-STAGE	4,000	157.5	2,030	79.9	942	37.1	6/6	4,736	10,441	5,056	11,146
	4,500	177.2	2,195	86.4	1,107	43.6	6/6	4,801	10,584	5,121	11,290
	4,800	189	2,265	89.2	1,177	46.3	6/6	4,830	10,648	5,150	11,354
	5,000	196.9	2,365	93.1	1,277	50.3	3/6	4,866	10,728	5,186	11,433
	6,000	236.2	2,915	114.8	1,827	71.9	3/6	4,996	11,014	5,316	11,720
	7,000	275.6	3,605	141.9	2,517	99.1	3/6	5,125	11,299	5,445	12,004

SPECIFICATIONS

	MODEL			CLG2020H	CLG2020G	CLG2025H	CLG2025G
1	Power Type			Diesel	Gasoline/LPG	Diesel	Gasoline/LPG
2	Base Capacity	@ rated load center	lbs	4,000	4,000	5,000	5,000
3	Load Center		in	24	24	24	24
4	Service Weight	unloaded	lbs	8,046	8,046	8,488	8,488
5	Axle Load	loaded/unloaded, front	lbs	11,530/3,380	11,530/3,380	12,390/3,479	12,390/3,479
6		loaded/unloaded, rear	lbs	1,371/4,667	1,371/4,667	1,610/5,010	1,610/5,010
7	Tire Type			Pneumatic	Pneumatic	Pneumatic	Pneumatic
8	Wheels	front/rear		2/2	2/2	2/2	2/2
9	Wheelbase		in	64.9	64.9	64.9	64.9
10	Tire Size	front		7.00-12-12PR	7.00-12-12PR	7.00-12-12PR	7.00-12-12PR
11		rear		6.00-9-10PR	6.00-9-10PR	6.00-9-10PR	6.00-9-10PR
12	Tread Width	front/rear	in	37.8/36.3	37.8/36.3	37.8/36.3	37.8/36.3
13	Max. Fork Height	with std 2-stage mast	in	118	118	118	118
14	Freelift	with std 2-stage mast	in	5.7	5.7	5.7	5.7
15	Height, Upright Lowered	with std 2-stage mast	in	85.6	85.6	85.6	85.6
16	Height, Upright Extended	with std 2-stage mast	in	160.9	160.9	160.9	160.9
17	Mast Tilt, Fwd/Back	with std 2-stage mast	deg	6/12	6/12	6/12	6/12
18	Carriage	width	in	40.9	40.9	40.9	40.9
19	Fork Spread	minumum/maximum	in	9/39.7	9/39.7	9/39.7	9/39.7
20	Fork Dimension	TxWxL	in	1.5 x 3.9 x 42	1.5 x 3.9 x 42	1.5 x 3.9 x 42	1.5 x 3.9 x 42
21	Length to Fork Face	with std 2-stage mast	in	99.5	99.5	99.5	99.5
22	Overall Width		in	45.2	45.2	45.2	45.2
23	Overhead Guard Height		in	85.8	85.8	85.8	85.8
24	Turning Radius	minimum outside	in	89.7	89.7	89.7	89.7
25	Fork Overhang	with std 2-stage mast	in	18.1	18.1	18.1	18.1
26	Right Angle Stack	add load length and clearance	in	157.9	157.9	157.9	157.9
27	Ground Clearance	minimum load	in	4.7	4.7	4.7	4.7
28		center of wheelbase	in	5.7	5.7	5.7	5.7
29	Travel Speed	loaded/unloaded	mph	11/11.5	11/11.5	11/11.5	11/11.5
30	Lift Speed	loaded/unloaded	fpm	125/143	137/143	125/143	137/143
31	Lower Speed	loaded/unloaded	fpm	98/78.7	98/78.7	98/78.7	98/78.7
32	Max. Drawball Pull	loaded	lbs	3,968	3,968	3,968	3,968
33	Max. Gradeability	loaded/unloaded	%	20/31	20/31	20/31	20/31
34	Brakes	service		Foot/Hyd	Foot/Hyd	Foot/Hyd	Foot/Hyd
35		parking		Hand/Mech	Hand/Mech	Hand/Mech	Hand/Mech
36		manufacturer		Yanmar	PSI	Yanmar	PSI
37		model		4TNE92-HRJ	4G64	4TNE92-HRJ	4G64
38	Engine	emission compliance		EPA Certified	EPA Certified	EPA Certified	EPA Certified
39		cylinders		4	4	4	4
40		displacement	liter	2.66	2.4	2.66	2.4
41		rated power	hp	44	62	44	62
42		max. torque	lb/ft{rpm}	103/1,700	123/1,600	103/1,700	123/1,600

	MODEL			CLG2030H	CLG2030G	CLG2035H	CLG2035G
1	Power Type			Diesel	Gasoline/LPG	Diesel	Gasoline/LPG
2	Base Capacity	@ rated load center	lbs	6,000	6,000	7,000	7,000
3	Load Center		in	24	24	24	24
4	Service Weight	unloaded	lbs	9,876	9,876	10,582	10,582
5	Axle Load	loaded/unloaded, front	lbs	14,510/4,050	14,510/4,050	16,102/4,233	16,102/4,233
6		loaded/unloaded, rear	lbs	1,980/5,826	1,980/5,826	2,195/6,350	2,195/6,350
7	Tire Type			Pneumatic	Pneumatic	Pneumatic	Pneumatic
8	Wheels	front/rear		2/2	2/2	2/2	2/2
9	Wheelbase		in	66.9	66.9	66.9	66.9
10	Tire Size	front		28x9-15-14PR	28x9-15-14PR	28x9-15-14PR	28x9-15-14PR
11		rear		6.50-10-10PR	6.50-10-10PR	6.50-10-10PR	6.50-10-10PR
12	Tread Width	front/rear	in	39.3/39	39.3/39	39.3/39	39.3/39
13	Max. Fork Height	with std 2-stage mast	in	118	118	118	118
14	Freelift	with std 2-stage mast	in	5.7	5.7	5.7	5.7
15	Height, Upright Lowered	with std 2-stage mast	in	86.4	86.4	86.4	86.4
16	Height, Upright Extended	with std 2-stage mast	in	160.9	160.9	160.9	160.9
17	Mast Tilt, Fwd/Back	with std 2-stage mast	deg	6/12	6/12	6/12	6/12
18	Carriage	width	in	43.3	43.3	43.3	43.3
19	Fork Spread	minumum/maximum	in	10.7/42.2	10.7/42.2	10.7/42.2	10.7/42.2
20	Fork Dimension	TxWxL	in	1.77 x 4.8 x 42	1.77 x 4.8 x 42	1.9 x 4.8 x 42	1.9 x 4.8 x 42
21	Length to Fork Face	with std 2-stage mast	in	105.1	105.1	106.6	106.6
22	Overall Width		in	48.2	48.2	48.2	48.2
23	Overhead Guard Height		in	86.6	86.6	86.6	86.6
24	Turning Radius	minimum outside	in	94.4	94.4	95.8	95.8
25	Fork Overhang	with std 2-stage mast	in	18.7	18.7	18.7	18.7
26	Right Angle Stack	add load length and clearance	in	163.2	163.2	165	165
27	Ground Clearance	minimum load	in	5.5	5.5	5.5	5.5
28		center of wheelbase	in	6.5	6.5	6.5	6.5
29	Travel Speed	loaded/unloaded	mph	11.5/11.8	11.5/11.8	11.5/11.8	11.5/11.8
30	Lift Speed	loaded/unloaded	fpm	114/116	114/116	114/116	114/116
31	Lower Speed	loaded/unloaded	fpm	98.4/78.7	98.4/78.7	98.4/78.7	98.4/78.7
32	Max. Drawball Pull	loaded	lbs	4,188	4,188	4,188	4,188
33	Max. Gradeability	loaded/unloaded	%	20/31	20/31	20/31	20/31
34	Brakes	service		Foot/Hyd	Foot/Hyd	Foot/Hyd	Foot/Hyd
35		parking		Hand/Mech	Hand/Mech	Hand/Mech	Hand/Mech
36		manufacturer		Yanmar	PSI	Yanmar	PSI
37		model		4TNE98-BQFLC	4G64	4TNE98-BQFLC	4G64
38	Engine	emission compliance		EPA Certified	EPA Certified	EPA Certified	EPA Certified
39		cylinders		4	4	4	4
40		displacement	liter	3.32	2.4	3.32	2.4
41		rated power	hp	56	62	56	62
42		max. torque	lb/ft{rpm}	145/1,700	124/1,600	145/1,700	124/1,600

LIUGONG

TOUGH WORLD. TOUGH EQUIPMENT.

LiuGong Construction Machinery N.A, LLC.
22220 Merchants Way - Suite 100
Katy, TX 77449
USA

T: 281-579-8882 F: 281-579-8388
www.liugongna.com

Like and follow us:

LG-PB-C-SERIES FL-022018-ENG-US

The LiuGong series of logos herein, including but not limited to word marks, device marks, letter of alphabet marks and combination marks, as the registered trademarks of Guangxi LiuGong Group Co., Ltd. are used by Guangxi LiuGong Machinery Co., Ltd. with legal permission, and shall not be used without permission. Specifications and designs are subject to change without notice. Illustrations and pictures may include optional equipment and may not include all standard equipment. Equipment and options varies by regional availability.